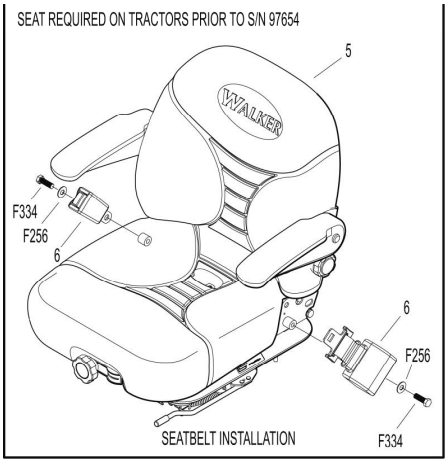
SEAT REQUIRED ON TRACTORS PRIOR TO S/N 97654
5
WALKER
F334
F256
6
6
F256
F334
SEATBELT INSTALLATION

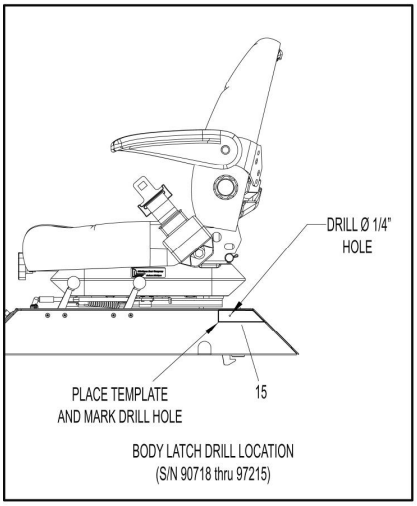
DRILL Ø 1/4"
HOLE
PLACE TEMPLATE
AND MARK DRILL HOLE
15
BODY LATCH DRILL LOCATION
(S/N 90718 thru 97215)

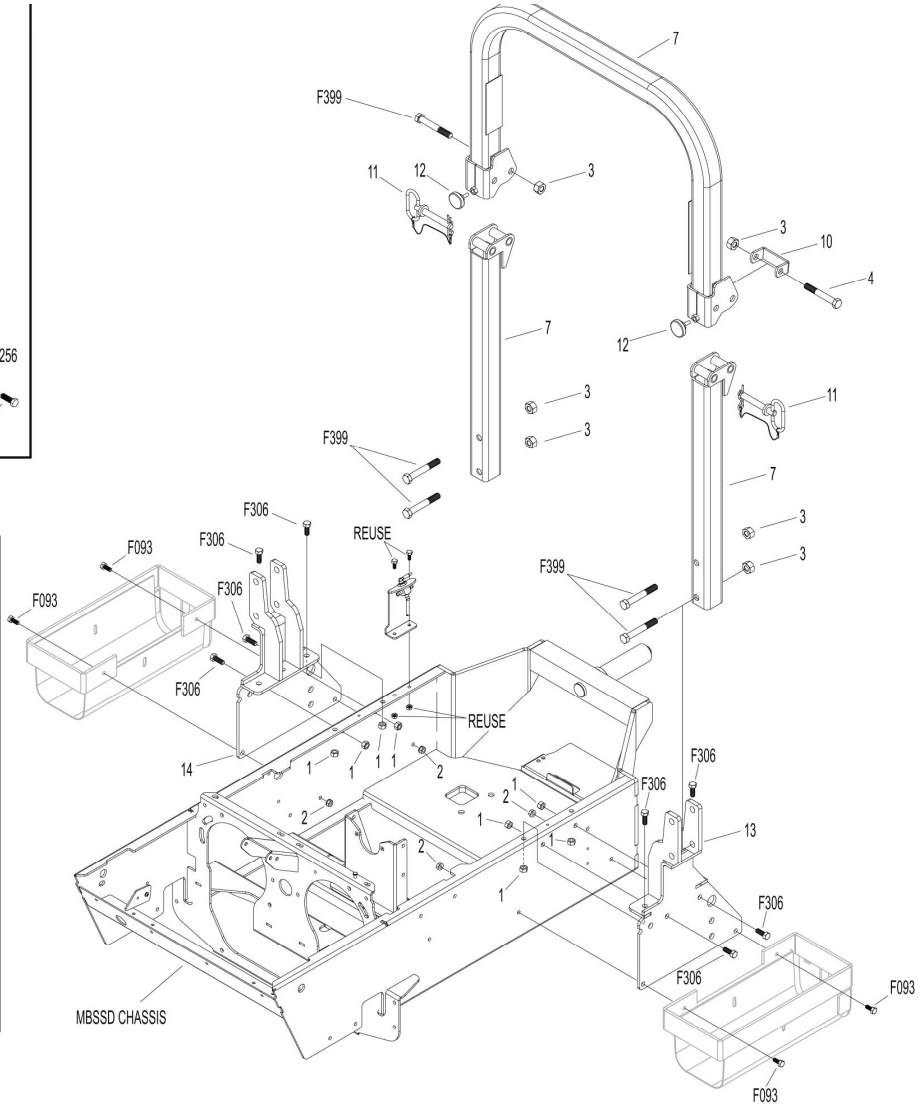
7
F399
11
12
3
3
10
4
12
7
3
3
11
F399
7
F306
REUSE
3
3
F093
F306
F399
F093
F306
F306
REUSE
14
1
1
1
1
2
2
1
2
1
1
2
1
F306
F306
13
F306
F306
F093
MBSSD CHASSIS
F093

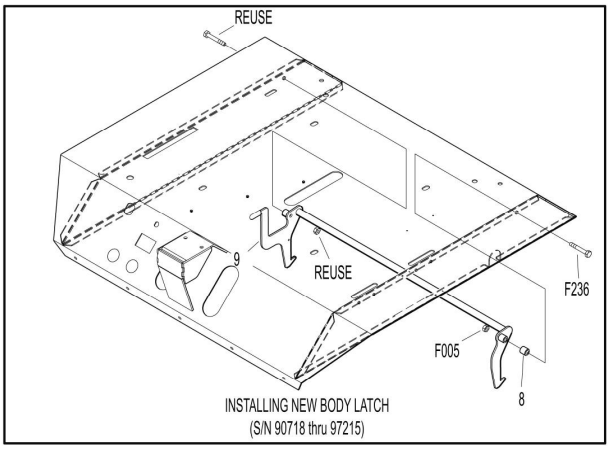
REUSE
9
REUSE
F236
F005
8
INSTALLING NEW BODY LATCH
(S/N 90718 thru 97215)

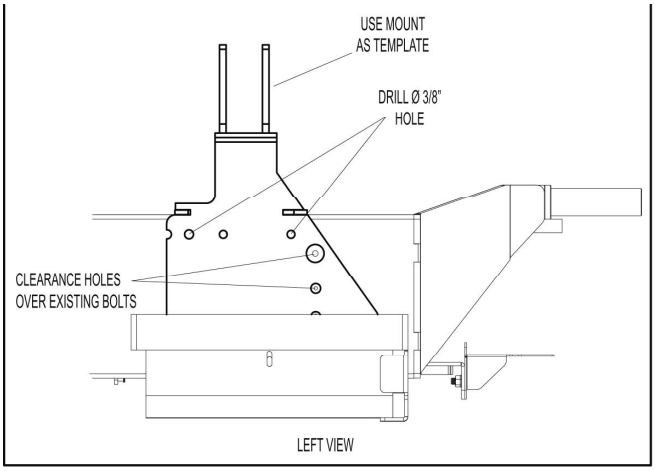
USE MOUNT
AS TEMPLATE
DRILL Ø 3/8"
HOLE
CLEARANCE HOLES
OVER EXISTING BOLTS
LEFT VIEW

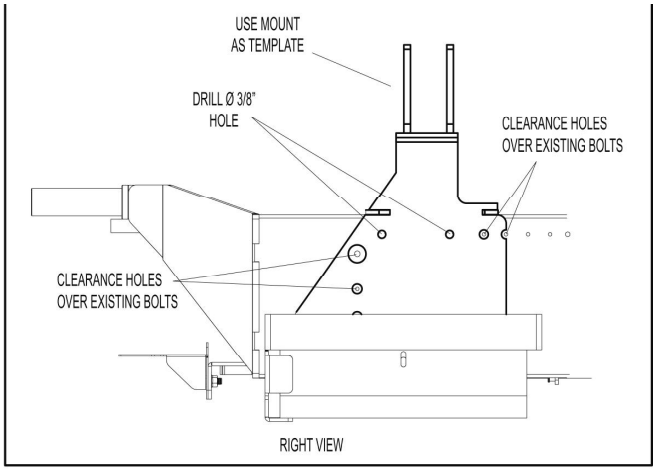
USE MOUNT
AS TEMPLATE
DRILL Ø 3/8"
HOLE
CLEARANCE HOLES
OVER EXISTING BOLTS
CLEARANCE HOLES
OVER EXISTING BOLTS
RIGHT VIEW

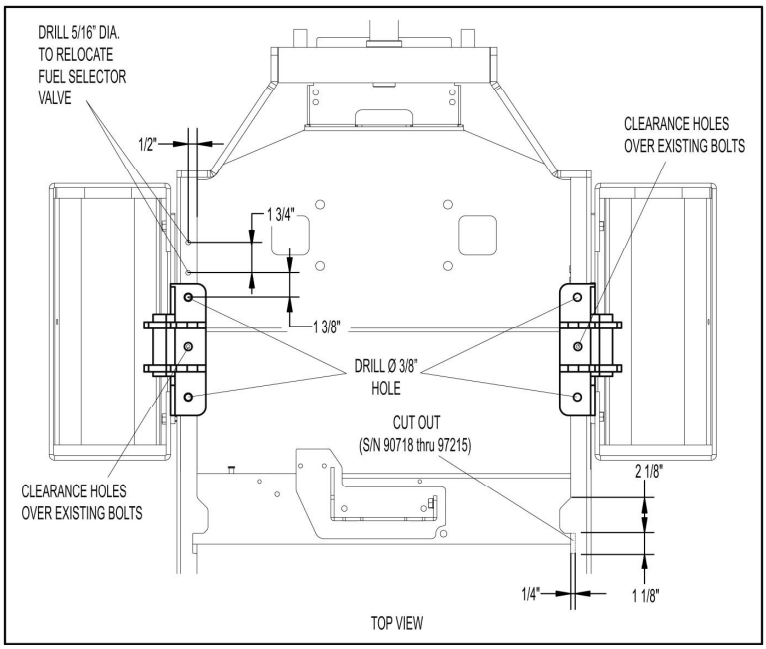
DRILL 5/16" DIA.
TO RELOCATE
FUEL SELECTOR
VALVE
1/2"
1 3/4"
1 3/8"
CLEARANCE HOLES
OVER EXISTING BOLTS
DRILL Ø 3/8"
HOLE
CUT OUT
(S/N 90718 thru 97215)
CLEARANCE HOLES
OVER EXISTING BOLTS
2 1/8"
1/4"
1 1/8"
TOP VIEW